JEC magazine
COMPOSITES

n° 92

Special JEC Americas

October - November 2014

www.JECcomposites.com

is only obtained due to the silane-based surface treatment of composite-grade glass fibres. The high impact strength of the woven silk composites, on the other hand, was not surprising given the enviable balance of strength and ductility of silk fibres, and the high failure strain capacities of their composites.

Conclusions

The Oxford Silk Group found that silk composites are an excellent alternative to plant fibre composites, and even a potential sustainable option against glass composites, in appropriate applications; for instance, in i) lightweight, tough components, such as high-performance helmets (Figure 6) and aerial surveying drones, and ii) lightweight, flexural stiffness- or strength-critical components, such as composite construction beams, automotive load floors, and sporting equipment. Certainly, depending on the application, other factors such as materials cost and materials environmental ageing properties will require attention. Nevertheless, considering the increasing renewed interest in engineering materials of natural origin, silks seem to be a strong natural fibre candidate for reinforcements in polymer composites. ■

More information:
www.oxfordsilkgroup.com
*Corresponding author:
darshil.shah@zoo.ox.ac.uk; darshil.shah@hotmail.co.uk

Acknowledgements
The Oxford Silk Group thanks the US Air Force Office for Scientific Research (AFOSR Grant Number F49620-03-1-0111) and the European Research Council Advanced Grant (SP2-GA-2008-233409) for generous funding.

References

[1] F. Vollrath, Porter D, Holland C, Soft Matter, 7 (2011) 9595-9600.
[2] F. Vollrath, Porter D, Holland C, MRS Bulletin, 38 (2013) 73-80.
[3] C. Vepari, Kaplan DL, Progress in Polymer Science, 32 (2007) 991-1007.
[4] J. Hardy, Scheibel TR, Progress in Polymer Science, 35 (2010) 1093-1115.
[5] G. Altman, Diaz F, Jakuba C, Calabro T, Horan RL, Chen J, Lu H, Richmond J, Kaplan DL, Biomaterials, 24 (2003) 401-416.
[6] O. Hakimi, Knight DP, Vollrath F, Vadgama P, Composites: Part B, 38 (2007) 324-337.
[7] D. Shah, Porter D, Vollrath F, Composites Part A: Applied Science and Manufacturing, 62 (2014) 1-10.
[8] D. Shah, Porter D, Vollrath F, University of Oxford, Oxford, 2014.
[9] M. Ashby, Cambridge University and Granta Design, Cambridge, UK, 2008.
[10] R. Carter, Scott LA, Holland CA, Vollrath F, 2012.

Semi-automated production of composite beams

In cooperation with AirConcept GmbH, the Institut fuer Textiltechnik of RWTH Aachen University is developing a semi-automated process that combines textile preforming technologies with liquid composite moulding (LCM) to manufacture FRP beams in a reproducible and productive way. These bespoke medium-series beams can be used in a huge number of applications.

Hans-Christian Frueh, Research assistant,
Christoph Greb, Head of composites division,
Thomas Gries, Head of Institut für Textiltechnik
Institut für Textiltechnik der RWTH Aachen University

Fibre-reinforced plastics (FRP) are used in a variety of applications due to their high weight-saving potential. The design criteria and geometry of FRP components differ with every specific application. However, there are also components which may be used in a similar form in a variety of fields, such as beams. Beams are structural elements with a constant cross-section which are mostly subject to bending loads. They are used in various fields of the mobility, construction and mechanical engineering sectors. They can be used as semi-beams with one-sided support or as cantilever beams with multiple bearings. Typical applications of beams include:

- spars for (sport) airplane wings and wind turbines,
- supports and scaffolding in construction,
- overhead cranes and gantries,
- machine beds.

The Institut fuer Textiltechnik of RWTH Aachen University is developing, in cooperation with AirConcept GmbH, a process for the reproducible and productive manufacture of FRP beams. This semi-automated process combines textile preforming technologies with liquid composite moulding (LCM). It allows for the production of beams with maximum dimensions of 60 x 250 x 10,000 mm, as most of the above-mentioned applications can be covered with beams of this size. Accurate alignment of the reinforcing fibres (0° spar cap, ± 45° shear web) is a prerequisite for maximum material utilization. An innovative, modular manufacturing system is being developed to allow for both this accuracy and design flexibility.

Great automation potential

Composite parts are currently used in various designs where their low weight and stiffness provide key benefits compared to conventional materials such as aluminium or steel. The main problem when using composite parts for mass production is the lack of process chains enabling economic production while maintaining high quality.

Preforming technologies offer great potential for the automated production of CFRP parts [1,2]. A method based on these technologies has been developed to produce CFRP beams.
In recent years, a variety of automated preforming and manufacturing technologies have been developed and are used in current industrial applications such as the pressure bulkhead of the Airbus A380. Figure 1 shows the planned economical classification of the new InnoBeam development in comparison with existing technologies. While maintaining a medium productivity, the investment costs are kept low.

At the same time, the new development should feature high flexibility, on the same level as hand lay-up techniques. Highly automated

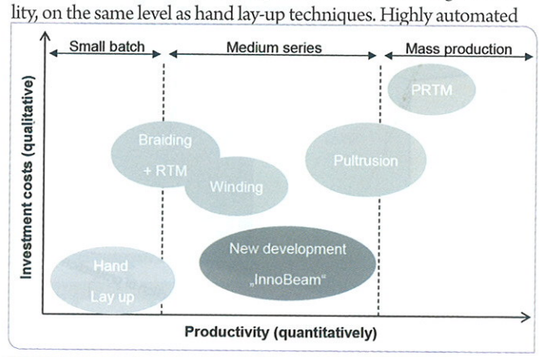

Fig. 1: Investment costs compared to productivity for different manufacturing methods

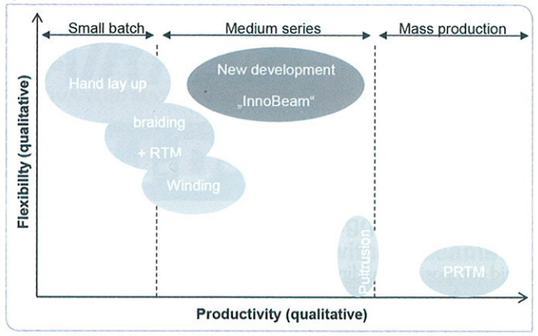

Fig. 2: Flexibility compared to productivity for different manufacturing methods

production methods such as pultrusion or PRTM do not allow the manufacture of tapered designs or fast design changes (e.g. changed lay-ups). Even the systems engineering can be considered more costly [3,4,5].
To keep the initial costs low, it was decided to develop a semi-automated method for the manufacture of preforms for beams with the following characteristics:

- high productivity and accurate repeatability through semi-automation of the process chain,
- efficient material usage and reduced waste due to almost net-shaped manufacturing of preforms.

Development of a beam preform manufacturing concept

The development process was conducted according to guideline VDI 2221 [6]. At first, ideas were collected and combined for rough manufacturing concepts. After an evaluation phase, the final concept needed to be designed, deciding whether to move the foam core

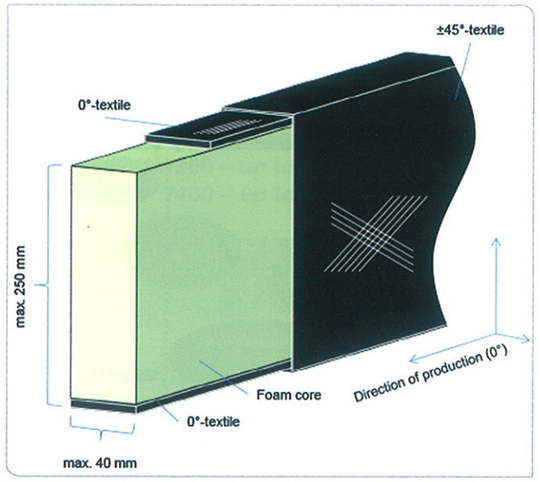

Fig. 3: Beam structure

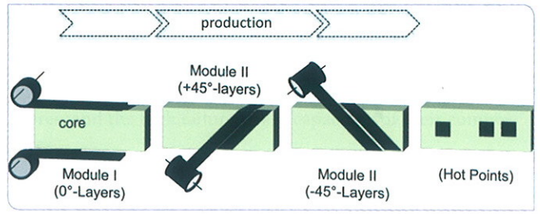

Fig. 4: Modular layout of the installation

through stationary machines or to keep the foam core stationary. Another consideration was made between contact-free binder activation versus ironing. The installation has a modular layout.
The main objective was to handle a foam core/preform 60 x 250 x 10,000 mm in size, taking into account a lack of inherent stability. The foam core would be moved through each of the modules. The translational feed and the rotation of the foam core will be achieved by means of toothed belts driven by servo motors. The beam chords, consisting of bindered UD fibre material, will be applied offline on a desk. This requires a separate step to join the chord preforms with the foam core using a liquid spray adhesive. Binder activation is done by ironing.
To enhance the stability of the foam core during processing and handling, it will be stiffened by braced tubes. This will enable precise lay-up. The ±45° layers are applied by a winding process. The angle of the winding process will be adjusted by electronically coupling the servo motors. Figure 5 provides an overview of the entire manufacturing process.

Technical preparation

In the following section, the actual design of each module of the facility is described in detail. Aluminium profiles are used as the main construction material because they provide notches so that modifications can be made easily. The whole installation consists of 3 modules: (1) Module 1, (2) Main frame and (3) Module 2.

Module 1

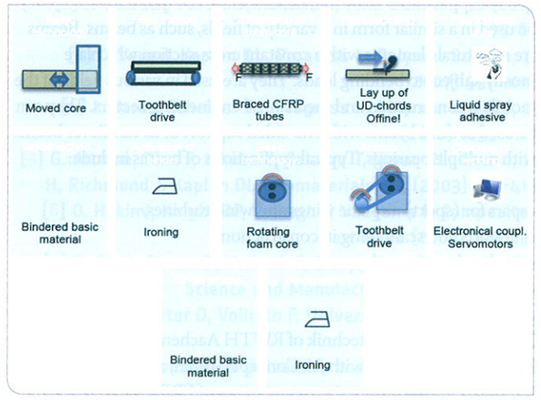

Fig. 5: Schematic manufacturing

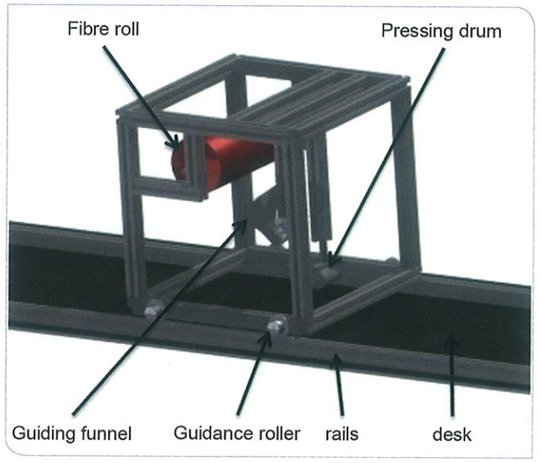

Fig. 6: Module 1 on the lay-up desk

The frame for this module is made of aluminium profiles. This frame provides a mount for the fibre material. The fibres are positioned through a guiding funnel and finally applied on a desk by a pressing drum. The module itself is equipped with guiding rollers which move on rails. The rails are attached to the desk.

Main frame

The main frame (see Figure 7) is made of aluminium profiles as well. A triangular structure was chosen to ensure maximum stiffness. A flange is left open to enable the application and the winding process.

Aluminium plates are fitted at both ends to hold the bearings, with a rotation drive at one end. The drive shaft has two bore holes. The tubes that carry the foam core are inserted through the drive shafts and held in place by the main frame. The steel tubes are covered with CFRP tubes in order to enhance their stiffness and reduce the need for additional support.
Since foam cores of the required size are not available on the market, the foam core is assembled on the supporting tubes. Figure 8 shows a prepared foam core segment on the right and, on the left, the assembled foam core with the resulting bore holes.

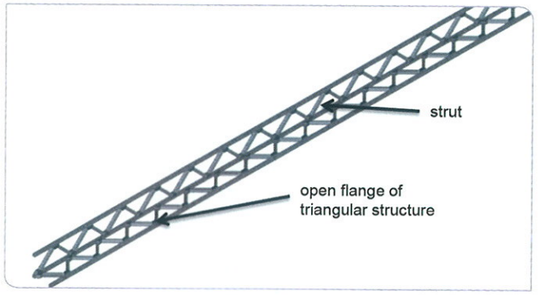

Fig. 7: Triangular-shaped main frame

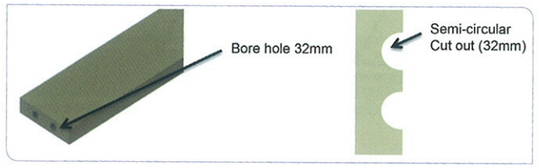

Fig. 8: Foam core; right: section view of a segment; left: assembled foam core with the resulting bore holes

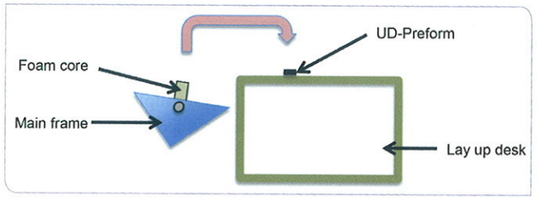

Fig. 9: Pick-up sequence of UD chords with main frame

The main frame also enables picking up the chord preforms from the preparation desk. For correct positioning, the supporting tubes slide into guiding rails mounted on the preparation desk. Figure 9 shows a schematic view of the handling process.

Module 2

In this module, the ±45° layers are applied using a winding process. Carbon fibre rovings up to 50k are used for this purpose. The installation makes it possible to apply up to 62 rovings in parallel. The rovings are aligned using a comb. The main frame is put into a tracking system and connected to a linear guide unit. The tracking system allows ergonomic changes during the preform manufacturing step. Figure 10 shows the general arrangement on the shop floor (top view). The rovings are provided by a fibre creel that makes it possible to adjust the tension of the single fibres up to 350cN.

Figure 11 shows the integration of the main frame into module 2. The main frame has fixed rollers for the translational feed motion

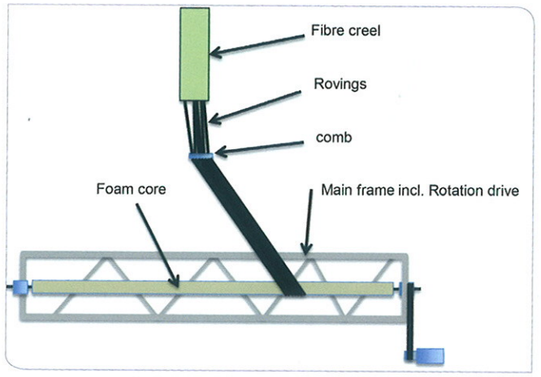

Fig. 10: Layout of module 2 on the shop floor

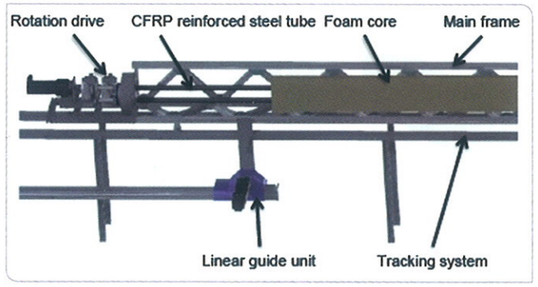

Fig. 11: Integration of the main frame into module 2

during the winding process. The mechanical coupling between the linear guide unit and the main frame is provided by a bolt.

Conclusions and outlook

The current state of the art for the production of FRP beams is a costly and unchained manual process. The InnoBeam project intends to establish a semi-automated solution to produce such beams.
In this paper, a manufacturing plant is planned and designed for the semi-automated production of preforms used for carbon fibre-reinforced (CFRP) beams. The construction process is carried out according to guideline VDI 2221. These beam preforms have a maximum size of 60 x 250 x 10,000 mm and consist of a foam core covered by carbon fibre layers according to customer needs. During production, this foam core is laid up with UD preforms for the chords and wound with fibres in a ±45° orientation in order to withstand the shear forces in the side planes. Since this foam core is not stable enough, it is manufactured in segments and assembled on CFRP-reinforced steel tubes. These tubes are fastened to a lightweight frame. The frame itself enables picking up the UD chord preforms and layers of ±45° rovings are wound around the foam core. This is achieved by electronically coupling the rotation drive with the translational feed motion using servomotors.
The field of application can easily be widened by small modifications of the drive shafts and different supporting tubes to fit other foam core geometries. The winding angles can be modified through small changes in the software used to control the electronic coupling of the translational feed motion with the rotation drive. ■

More information:
www.ita.rwth-aachen.de

Acknowledgement

[1] Henning, K.; Flachskampf, P.; Gries, T.; Grundmann, T.; Dilger, K.; Böhm, S.; Corves, B.; Kordi, M.T.; Hüsing, M.; Brecher, C.; Schröter, B.: Wirtschaftliche Herstellung von Faserverbundbauteilen mit Hilfe automatisiert hergestellter textiler Preforms, Abschlussbericht zum Forschungsvorhaben AiF 14420 N am Institut für Unternehmenskybernetik an der RWTH Aachen e.V., Institut für Textiltechnik der RWTH Aachen, Institut für Füge- und Schweißtechnik der TU Braunschweig, Institut für Getriebetechnik und Maschinendynamik und Laboratorium für Werkzeugmaschinen und Betriebslehre der RWTH Aachen, Aachen, 2007
[2] Henning, K.; Gries, T.; Flachskampf, P. (HRSG.): Wirtschaftlichen Herstellung von Faserverbundbauteilen mit Hilfe automatisiert hergestellter textiler Preforms, Gemeinsamer Abschlussbericht, IfU Institut für Unternehmenskybernetik e.V. an der RWTH Aachen, 2008, Laufzeit: 1.6.2005 bis 31.5.2007
[3] AVK – Industrievereinigung Verstärkte Kunststoffe e.V.: Handbuch Faserverbundkunststoffe. 3. Aufl. – Wiesbaden: Vieweg + Teubner Verlag, 2010
[4]Lehmus, D.; Busse, M.; Hermann, A.; Kayvantash, K.: Structural Materials and Processes in Transportation, John Wiley & Sons, 2013
[5] Schürmann, H.: Konstruieren mit Faser-Kunststoff-Verbunden. 1. Aufl. – Berlin, Heidelberg: Springer-Verlag, 2005
[6]VDI 2221, Mai 1993 ,Methodik zum Entwickeln und Konstruieren technischer Systeme und Produkte

Non-destructive testing of composite structures

Aeronautical and automotive fibre composite structures often have curved surfaces and complex material properties. Therefore, non-destructive testing is challenging when using classical methods such as X-ray or ultrasound inspection. This paper presents two alternative methods that can cope with these challenges: active thermography and shearography.

By
Philipp Menner
Project Manager
Edevis GmbH

Modern aeronautical structures often consist of fibre-plastic composites, either monolithic or as sandwich structures in combination with materials like foam and honeycomb. This material mix with the corresponding complex types of flaws (porosity, kissing bonds, excess resin, dry fibres, undulation, delamination, impact) makes non-destructive testing a challenging task. Curved surfaces of highly integrated, large-scale composite structures make things even more difficult. Consequently, fast, remote and sensitive NDT methods are required. Active thermography and shearography both comply with these requirements.
Optically excited thermography uses halogen lamps, for example, to heat the surface. The heat then flows into the bulk material. Defects disturb the heat flux which is detectable by thermography cameras. Post-processing of the heat flow sequence by Fourier transformation, for example, reduces noise and allows for an estimation of the defect depth.

Intact honeycomb structures mainly consist of air. Water-filled honeycomb exhibits completely different thermal properties and is therefore easily detectable using thermography (Figure 1, left). Another defect type is impact damage which occurs while the aircraft is in operation. These defects are also clearly detectable, for example, in a monolithic CFRP shaft (Figure 1, right).

An example of a manufacturing defect is porosity. Figure 2 shows a visual image of a Grob aircraft overlaid with a thermography test image. Two enlarged areas show porosity around a window and in the tail

More information

Non-destructive characterization of composites:
- Fast
- Non-contact
- Imaging
- Automatable

TECHNOLOGIES & INNOVATIONS
- Non-destructive testing of composite structures P55
- Prediction of fibre microstructure in injection moulding using innovative simulation technology . P58
- From land, across the water and into the sky P62